MultiTable
HEIGHT ADJUSTABLE ELECTRIC STANDING DESK

DIMENSIONS AND SPECS:

Base

Colors

Black Silver White

Materials
Powder coated, rolled stamped steel

Dimensions
H 27.5" - 47", W 39.5" - 55.5", D 23.25"

Height Adjustable Range:	27.5" - 47"
Height Adjustable Range w/ Top:	28.25" - 47.75"
Width Adjustable Range:	39.5" - 55.5"
Top Support Depth:	23.25"
Foot Depth:	29.5"

Weight Limit/Capacity
250 lbs.

Warranty*
5 Year Limited
*30 day money back guarantee

Desk Top

Colors

Black Espresso Natural Pear White

Materials
High Quality Wilsonart® Thermally Fused Laminate Top (TFL)

Sizes

Small Desk Top:	24" X 40" X 3/4"
Medium Desk Top:	24" X 48" X 3/4"
Large Desk Top:	29" X 57" X 3/4"
Extra Large Desk Top:	29" X 72" X 3/4"

Wheel Kit*
Colors
Black, Silver and White

Width
Stability Bar Width: 41"
*Not compatible with Extra Large Table Tops

FREE SHIPPING IN CONTIGUOUS UNITED STATES
30-DAY MONEY BACK GUARANTEE

The MultiTable Electric base is our high quality electric height adjustable table base offering unparalleled performance. It is the perfect solution for any health-conscious working environment and creates a European contemporary look to any interior décor.

Mod-e HEIGHT ADJUSTABLE BASE

DIMENSIONS AND RANGE:

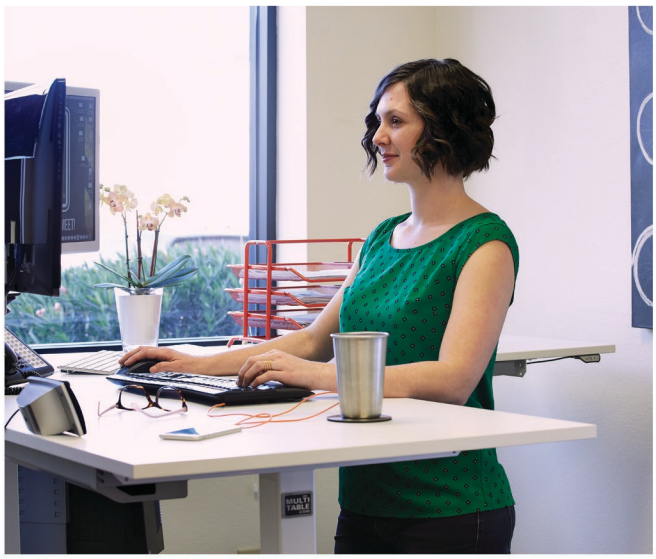

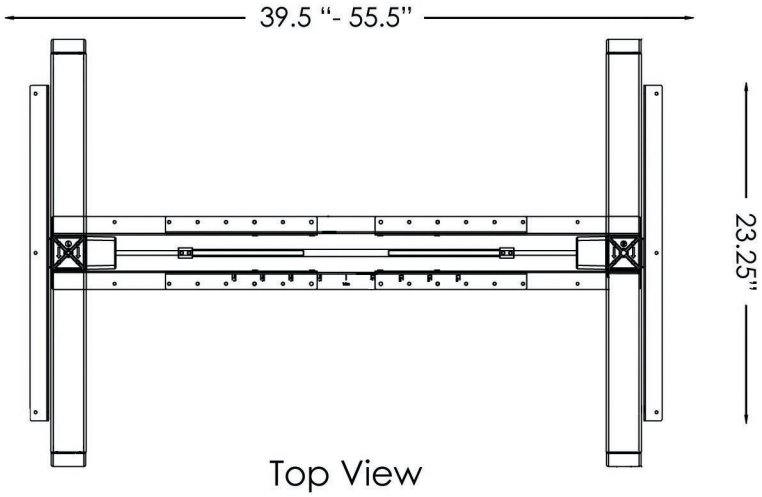

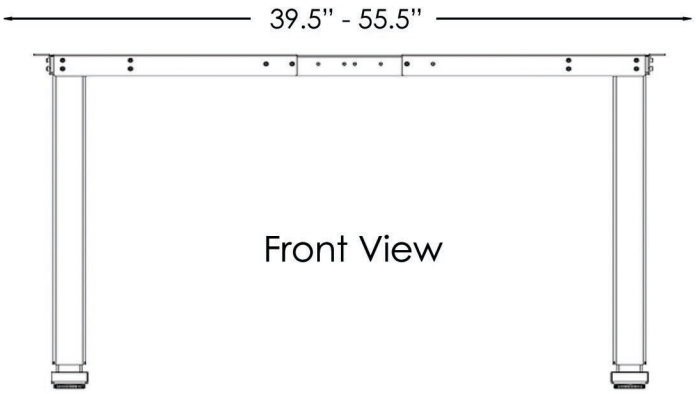

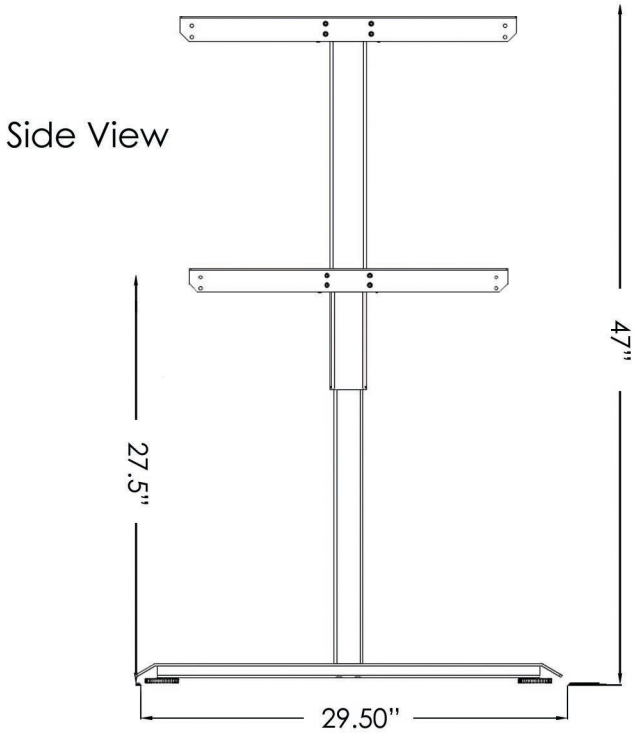

Primary features and benefits:

- Raises and lowers from 27.5 inches to 47 inches using high quality Bosch® dual motors
- Fastest in the industry, with only 9 seconds to raise from the lowest to the highest point!
- Features an intelligent computer that offers a "soft-start" and "soft-stop" (It doesn't spill your coffee...)
- Flexible base design allows the width to adjust to accommodates most different-sized desktops
- Crafted from rolled stamped steel for superior strength & stability
- Offers a fine powder coat finish for maximum durability
- Includes a 5-year limited warranty and 30-day no risk return guarantee

FREE SHIPPING IN CONTIGUOUS UNITED STATES

30-DAY MONEY BACK GUARANTEE

T: 855.469.6858 | F: 480.323.2437 | 2255 W Desert Cove Ave., Suite E Phoenix, AZ 85029, USA | www.MultiTable.com