The FlexTable by MultiTable®

Hand Crank or Electric

DIMENSIONS AND SPECS:

BASE

Colors

Black | Silver | White

Materials

Powder-coated premium aluminum and steel

Dimensions

Height Adjustable Range:	27 5/8" - 45 7/8"
Height Adjustable Range w/ Top:	28 3/8" - 46 5/8"
Width Adjustable Range:	43" - 67"
Width Adjustable Range w/ Small Top:	39" - 63"
Top Support Depth:	23 5/8"
Foot Depth:	29 1/2"

Weight Limit/Capacity

140 lbs.

Warranty

5-Year Limited

DESK TOP

Colors

Black | Espresso | Natural Pear | Fusion Maple | White

Materials

High Quality Wilsonart® Thermally Fused Laminate Top (TFL) w/ Matching PVC Smooth Edgebanding

Sizes

Small Desk Top:	24" x 40" x 3/4"
Medium Desk Top:	24" x 48" x 3/4"
Large Desk Top:	29" x 57" x 3/4"
Extra Large Desk Top:	29" x 72" x 3/4"
Custom Desk Tops:	Min. 24" x 40" x 3/4"
	Max. 36" x 91" x 3/4"

Wheel Kit*

Color: Chrome w/ Black Neoprene Rubber Tread
Casters: 2" (Total Lock Brake Models Lock Both Swivel and Wheel Rotation)
Casters add 2 1/2" of height to the base.
*Not Compatible with Extra Large Desk Tops

The FlexTable by MultiTable® is uniquely designed from the ground up to be the most steadfast, versatile and adaptable height adjustable standing desk made for today's modern workspace. Now the power is in your hands to sit or stand with an affordable height adjustable desk that can be ordered with an electric up-down switch or a manual hand crank – you get to choose how to raise and lower your desk surface. Best part is you can easily and quickly convert the FlexTable from a manual hand crank to an electric switch at any time with the Electric Upgrade Kit.

FREE SHIPPING IN CONTINUOUS UNITED STATES
30-DAY MONEY BACK GUARANTEE

The FlexTable by MultiTable®

Hand Crank or Electric

DIMENSIONS AND RANGE:

Top View

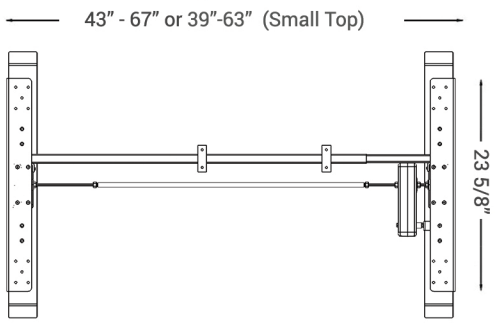

Front View

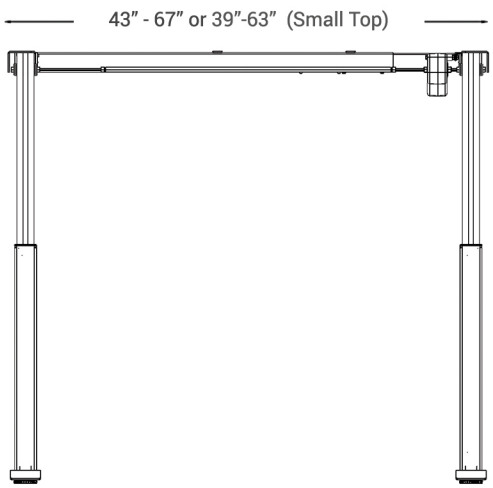

Side View

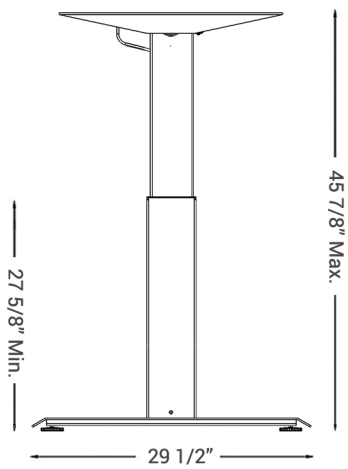

Colors

Black | Silver | White

Features

- Affordable, high-quality design in a variety of standard colors
- Powder-coated premium aluminum and steel desk frame
- Expansive height adjustability from 27 5/8" to 46 7/8"
- Adjustable desk frame width supports desk tops up to 72"
- Wide desk frame leg structure for improved stability and durability
- Flexible conversion from manual hand crank to electric switch with the FlexTable Electric Conversion Kit
- 30-day guarantee – zero risk return
- 5-year limited warranty

Offering impressive height adjustability from 27 5/8" to 46 7/8", the FlexTable is made from quality-grade aluminum and steel components that can support standard desk tops ranging from 44" to 72" wide. Our most affordable standing desk yet, FlexTable achieves the ultimate in functionality, comfort and flexibility. With MultiTable, you decide how to accomplish your best work.

FREE SHIPPING IN CONTIGUOUS UNITED STATES

30-DAY MONEY BACK GUARANTEE